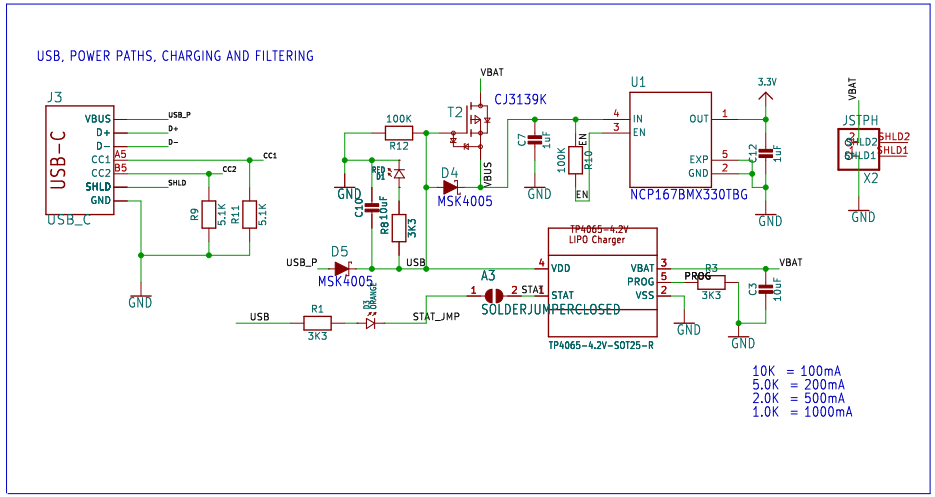

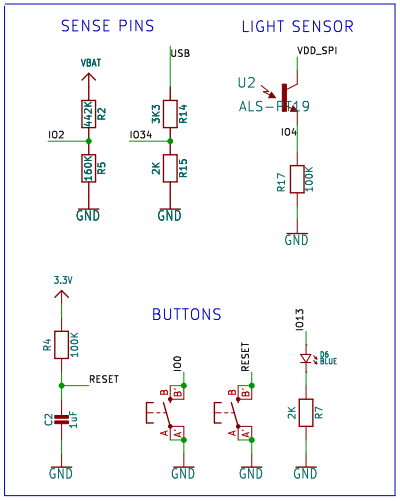

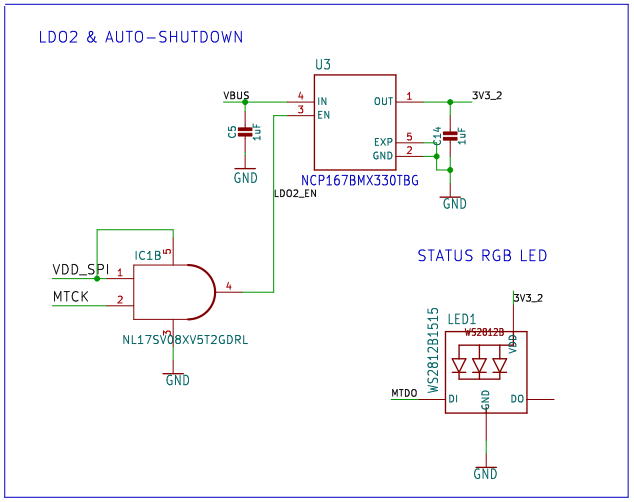

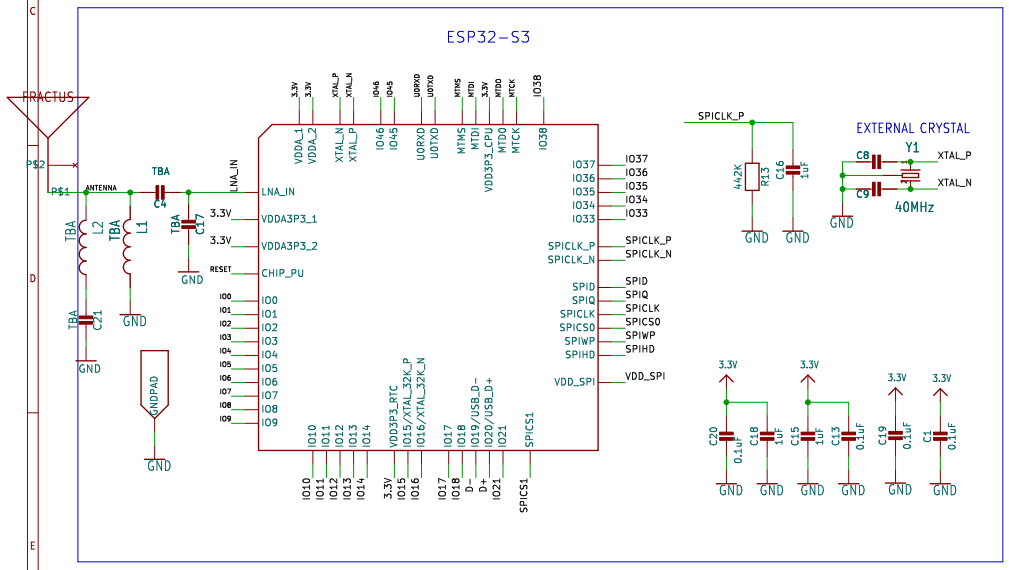

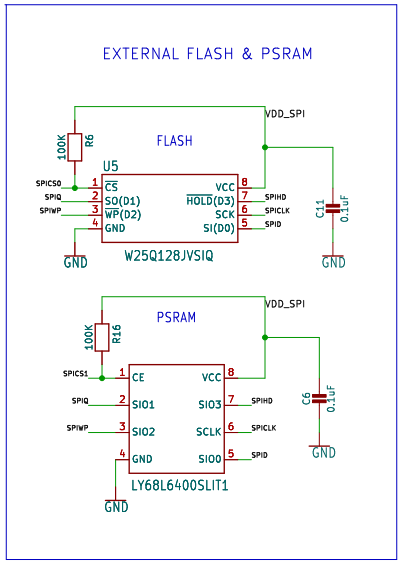

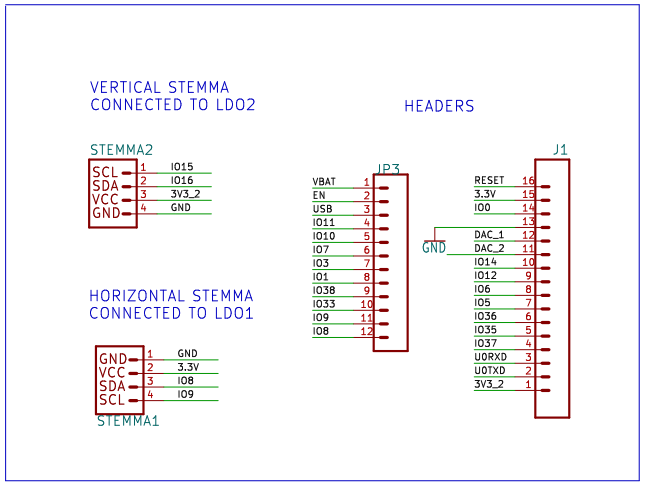

FeatherS3

Unexpected Maker

Sheet: /

File: FeatherS3_P7.kicad_sch

Title: FeatherS3

Size: A3	Date: 2022-01-26	Rev: P4
KiCad E.D.A. kicad (7.0.0-0)		Id: 1/1