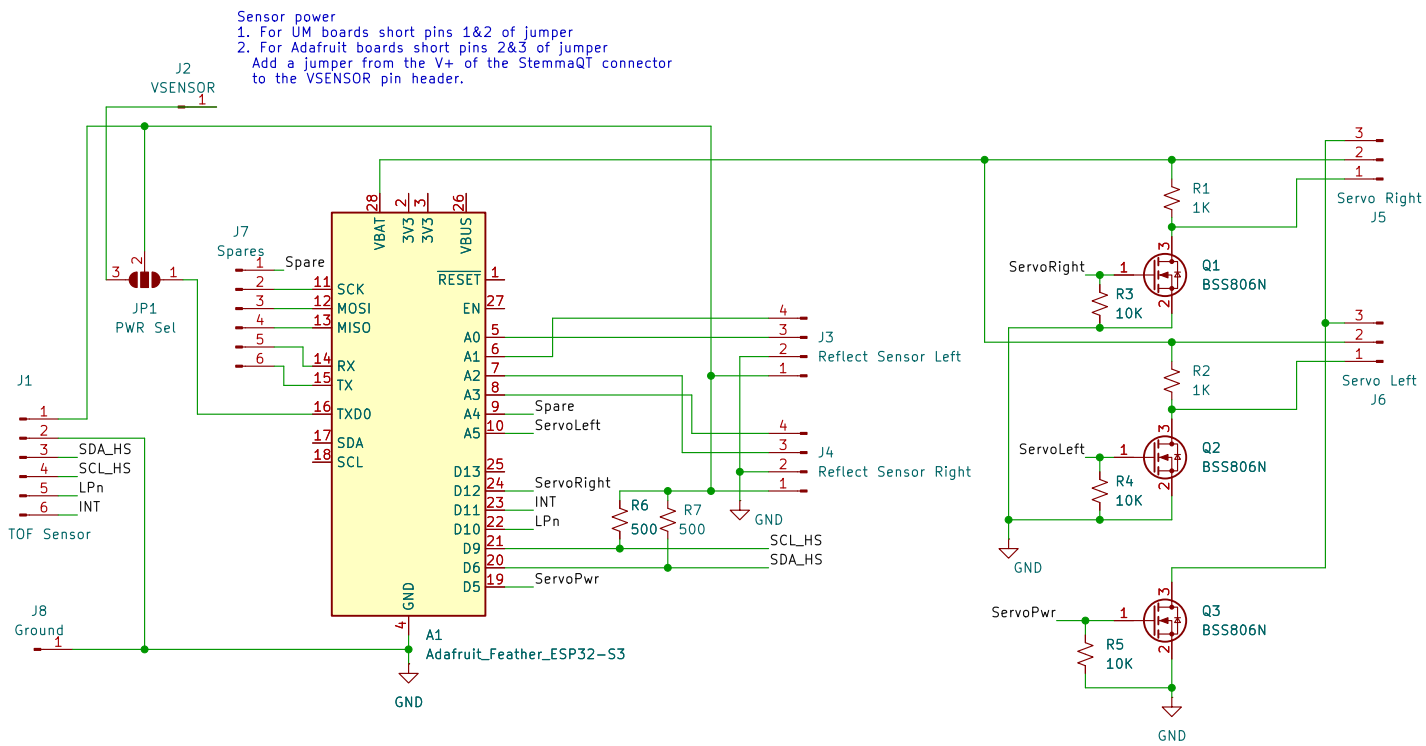

Carrier board for Explorers Sumo Bot V2
Supports both the Unexpected Maker Feather ESP32-S3[D] board
and the Adafruit Feather ESP32-S3 board

Sheet: /
File: SumoV2.kicad_sch

Title: Explorers Sumo Bot V2

Size: USLetter	Date: 2026-06-17	Rev: 1.1
KiCad E.D.A. 10.0.3		Id: 1/1